$\dot{\epsilon}$ is obtained from derivatives of velocity (not displacement) with respect to position

$$\begin{pmatrix} \frac{\partial V_x}{\partial x} & \frac{\partial V_x}{\partial y} \\ \frac{\partial V_y}{\partial x} & \frac{\partial V_y}{\partial y} \end{pmatrix} = \underbrace{\begin{pmatrix} \frac{\partial V_x}{\partial x} & \frac{1}{2}\left(\frac{\partial V_x}{\partial y} + \frac{\partial V_y}{\partial x}\right) \\ \frac{1}{2}\left(\frac{\partial V_x}{\partial y} + \frac{\partial V_y}{\partial x}\right) & \frac{\partial V_y}{\partial y} \end{pmatrix}}_{[\dot{\epsilon}]} + \underbrace{\begin{pmatrix} 0 & \frac{1}{2}\left(\frac{\partial V_x}{\partial y} - \frac{\partial V_y}{\partial x}\right) \\ -\frac{1}{2}\left(\frac{\partial V_x}{\partial y} - \frac{\partial V_y}{\partial x}\right) & 0 \end{pmatrix}}_{[\dot{\omega}]}$$

(symmetric) (anti-symmetric)

$$= \begin{pmatrix} \dot{\varepsilon}_{xx} & \dot{\varepsilon}_{xy} \\ \dot{\varepsilon}_{xy} & \dot{\varepsilon}_{yy} \end{pmatrix} + \begin{pmatrix} 0 & \dot{\omega} \\ -\dot{\omega} & 0 \end{pmatrix}$$

strain rate matrix — rotation rate matrix

Where the dot over a term indicates a time derivitive and ω is amount of rotation.

velocity gradients $\Rightarrow$ deformation rate $[\dot{\epsilon}]$ and rotation rate $[\dot{\omega}]$

principal strains

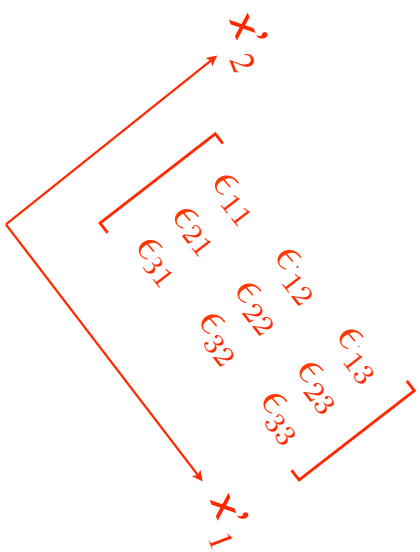

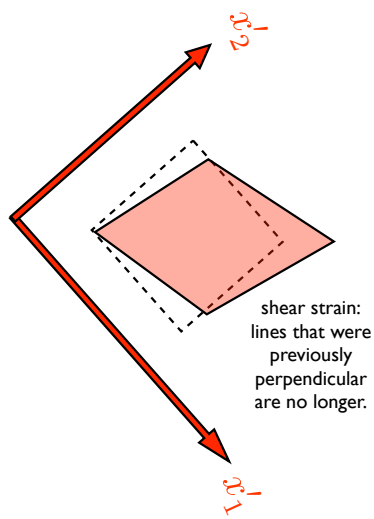

suppose you know the strain matrix, which was figured out in the (x'_1, x'_2, x'_3) coordinate system

By <u>rotating the coordinate system</u> you can express 2D strain with just two normal strains ("principal strains")

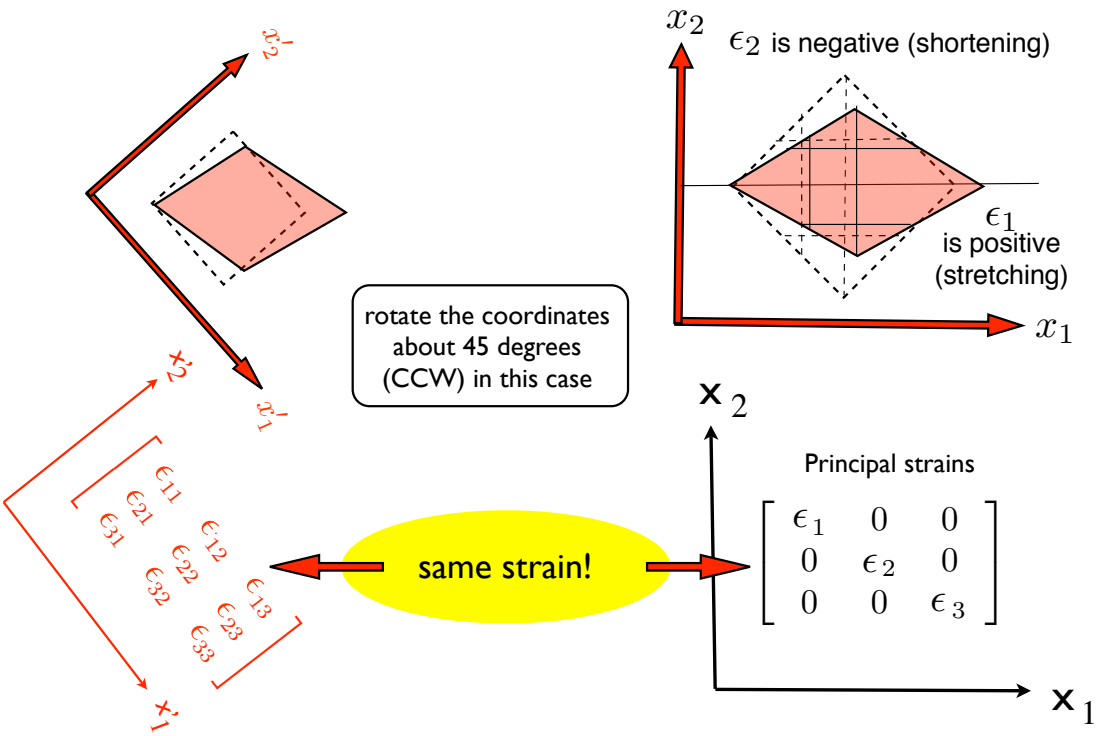

Stress is just force per unit area acting on a surface

It is just "some constant" times strain

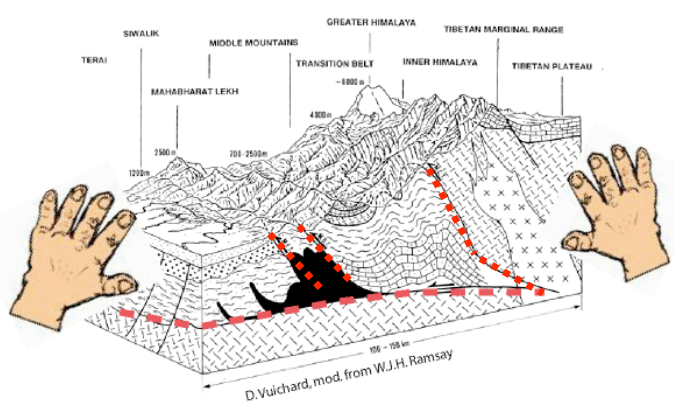

This means that stress is a tensor (that is, a matrix), too.

What are the units of force / area?

$$\begin{bmatrix} \epsilon_{11} & \epsilon_{12} \\ \epsilon_{21} & \epsilon_{22} \end{bmatrix} \text{ x elastic constants } = \begin{bmatrix} \sigma_{11} & \sigma_{12} \\ \sigma_{21} & \sigma_{22} \end{bmatrix}$$

If we choose the right coordinate system we can express strain in terms of normal strains only ("principal strains")

$$\begin{bmatrix} \epsilon_1 & 0 \\ 0 & \epsilon_2 \end{bmatrix}$$

ϵ_1 is the most negative normal strain

ϵ_2 is the most positive normal strain

The same is true of stresses.

$$\begin{bmatrix} \sigma_1 & 0 \\ 0 & \sigma_2 \end{bmatrix}$$

σ_1 is the most negative normal stress

σ_2 is the most positive normal stress

Normal stress causes normal strain

What are typical normal stresses in the Earth? How "big" is a Pascal?

Sign convention.

$$\begin{bmatrix} \sigma_1 & 0 \\ 0 & \sigma_2 \end{bmatrix}$$

σ_1 is the most negative normal stress

σ_2 is the most positive normal stress

differential stress: maximum principal stress minus minimum principal stress
maximum possible shear stress is 1/2 differential stress

Strain in the Earth due to normal stress:
Hooke's Law

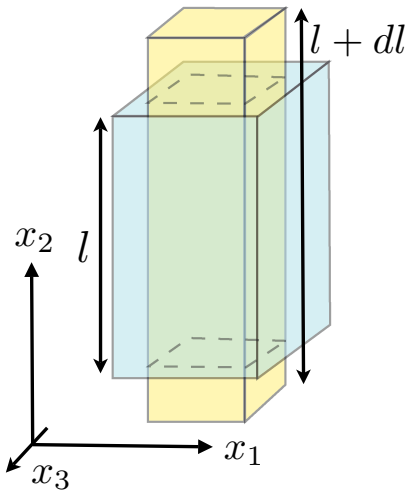

$$\epsilon_{22} = \frac{dl}{l} = \frac{du_2}{dx_2}$$

$$\boxed{\begin{aligned} \sigma_{22} &= E\epsilon_{22} \\ \epsilon_{22} &= \frac{\sigma_{22}}{E} \end{aligned}}$$

Note the contraction in the x_1-x_3 plane: this depends on another parameter - the Poisson's ratio

Only ϵ_{22} is not 0
("uniaxial stress")

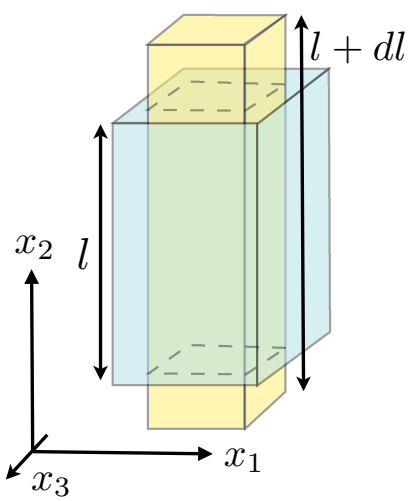

$$\sigma_{22} = E\epsilon_{22}$$

$$\epsilon_{22} = \frac{\sigma_{22}}{E}$$

$$\epsilon_{33} = \epsilon_{11} = \frac{-\nu\sigma_{22}}{E}$$

E is the "Young's Modulus"

In rocks, E is very, very large.

typical value is 7.5 x 10^{10} Pascals

$$\sigma_{22} = E\epsilon_{22}$$
$$\epsilon_{22} = \frac{\sigma_{22}}{E}$$

Typical ν is 0.25
0.5 means the material is
incompressible (like water)

Shear stress (sometimes called τ)
causes shear strain

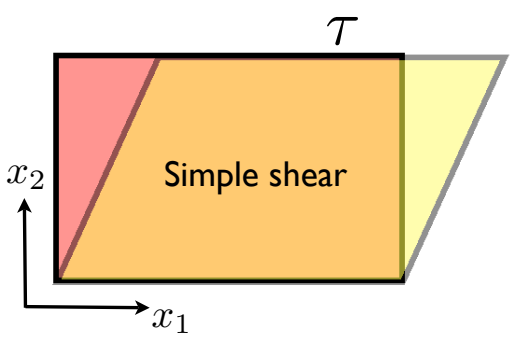

$$\tau_{21} = 2G\epsilon_{21}$$
$$\epsilon_{21} = \frac{\tau_{21}}{2G}$$

G is the "Shear Modulus"

In rocks, G is also very, very large.

typical value is 3 x 10^{10} Pascals

Lithostatic pressure in the Earth...

$$P = \rho g h$$

$\rho = 2500\ kg/m^3$

$g = 10\ m/s^2$

$h = \ depth\ (m)$

Moho is 30 km down

Cascadia SZ (80 km below us)

Deep ocean floor = 4 km

(EQ works for water or ice sheets too with correct density)

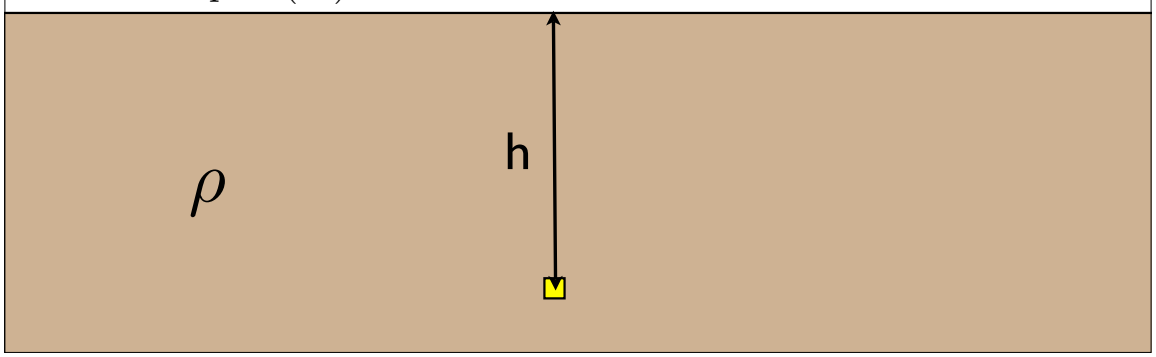

In a fluid normal stresses are -P ("hydrostatic pressure") shear stresses are 0

$$\begin{bmatrix} \sigma_1 & 0 \\ 0 & \sigma_2 \end{bmatrix} = \begin{bmatrix} \bar{\sigma} & 0 \\ 0 & \bar{\sigma} \end{bmatrix} = \begin{bmatrix} -P & 0 \\ 0 & -P \end{bmatrix}$$

Below the Earth's upper crust normal stresses are *close* to -P and shear stresses are small
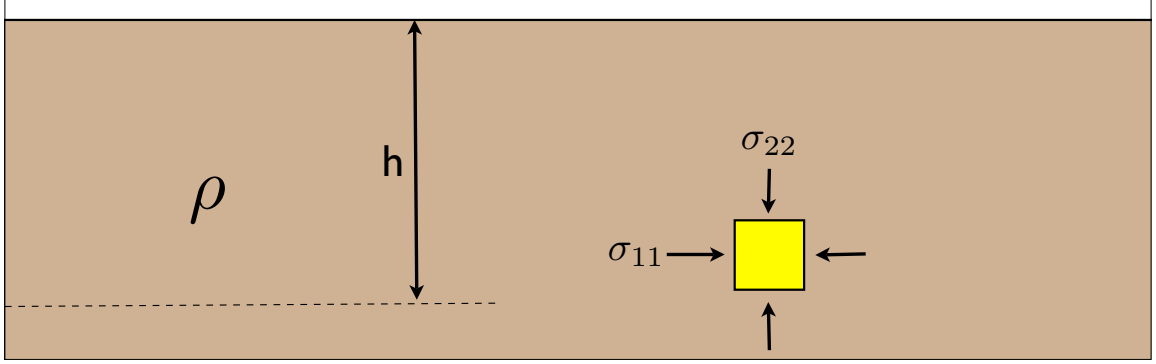
$$\begin{bmatrix} \sigma_1 & 0 \\ 0 & \sigma_2 \end{bmatrix} \approx \begin{bmatrix} \bar{\sigma} & 0 \\ 0 & \bar{\sigma} \end{bmatrix} = \begin{bmatrix} -P & 0 \\ 0 & -P \end{bmatrix}$$