Authorized Reprint from
Special Technical Publication 869
Copyright
American Society for Testing and Materials
1916 Race Street, Philadelphia, Pa. 19103
1985

Nikolas I. Christensen[1]

Measurements of Dynamic Properties of Rock at Elevated Temperatures and Pressures

REFERENCE: Christensen, N. I., "**Measurements of Dynamic Properties of Rock at Elevated Temperatures and Pressures,**" *Measurement of Rock Properties at Elevated Pressures and Temperatures, ASTM STP 869*, H. J. Pincus and E. R. Hoskins, Eds., American Society for Testing and Materials, Philadelphia, 1985, pp. 93-107

ABSTRACT: Measurements of dynamic properties of rock at high temperatures and pressures have many applications to geology and solid earth geophysics. Elastic wave velocities are obtained from rock cylinders in which delay times are measured using a pulse transmission technique. The longitudinal and shear velocities and bulk densities allow the calculation of isotropic elastic moduli. Techniques and equipment used for measuring velocities as functions of confining pressure, pore pressure, and temperature are summarized.

KEY WORDS: temperature, rocks, anisotropy, longitudinal velocity, shear velocity, elastic moduli, pressure

Author's Personal Copy

Direct observations on the nature of the materials that constitute the earth are limited to studies of surface exposures and rocks that have been obtained from mining and drilling. Drilling for economic and scientific purposes has penetrated to as deep as 10 km beneath the surface leaving much of the earth's interior presently inaccessible.

Much of what we infer about the mineralogy and structure of the earth and the tectonic processes that have operated throughout geologic history originates from refraction and reflection seismology. Many detailed seismic studies have provided valuable information on the distribution of velocities with depth in the earth. Interpretation of these velocities in terms of mineralogy and chemical composition rely on laboratory measurements of the dynamic properties of rocks at elevated temperatures and pressures. In addition, such measurements have become increasingly important in geophysical prospecting for minerals

[1]Professor, Department of Geosciences, Purdue University, West Lafayette, IN 47907.

and petroleum, study of nuclear waste isolation sites, earthquake prediction, and locating geothermal energy sources.

In this paper, the current status of techniques used in the measurements of dynamic properties of rocks is reviewed. Emphasis is placed on ultrasonic pulse methods of longitudinal and shear wave velocity measurements.

Sample Assembly and Electronics

Velocity measurements by the pulse transmission method consist of the determination of travel times of elastic waves in rock cylinders of known lengths. Early work of note includes the pioneering experiments of Bancroft [*1*] and velocity measurements in metal rods [*2*] and rocks by Hughes et al [*3*]. The latter studies benefitted greatly by many electronic advances developed during World War II. Excellent summaries of this technique are given by Birch [*4*], Simmons [*5*], and Schreiber et al [*6*].

Minimum sample size is limited by the dimensions of the minerals constituting the rock. Since most igneous, metamorphic, and sedimentary rocks have grain diameters less than 1 cm, cores 2.54 cm in diameter and 5 to 10 cm in length are commonly used in velocity measurements. Many finer grain rocks including most volcanic rocks are sufficiently smaller in grain size to permit smaller core dimensions. The rock cylinders are obtained by diamond bit coring. The core ends are cut flat and normal to the core axis with a precision cutoff saw or a surface grinder. Bulk densities of the cores are routinely obtained from their dimensions and weights.

Disk shaped piezoelectric transducers, usually of natural resonance frequencies of 1 MHz, are placed on each end of the sample. The sending transducer produces the desired mechanical motion, which travels through the sample and is converted by the receiving transducer to an electrical signal. The transducers are either cut from single crystals (for example, quartz and tourmaline) or consist of poled piezoelectric ceramic materials. Early velocity measurements commonly used quartz transducers. The faces of *X*-cut quartz transducers are perpendicular to the quartz *X* axis (Fig. 1). Application of an alternating electric field perpendicular to the faces produces elongation and contraction along the *X* axis and longitudinal waves. For shear waves *Y* cut and *AC* cut, quartz transducers have been in common use (Fig. 1). The *Y* cut transducers also produce considerable longitudinal energy, whereas the *AC* cut transducers are excellent for producing an extremely pure shear mode. Commercially available quartz shear transducers usually have flats ground on one edge such that the polarization of the generated shear waves are normal to the flats. The flats of the sending and receiving transducers should be aligned parallel to one another. For anisotropic rocks the vibration directions of shear waves as well as their propagation directions are critical.

Quartz transducers are suitable for temperature measurements since they do not lose their piezoelectric properties until the α-β transition at 573°C at 0.1

Author's Personal Copy

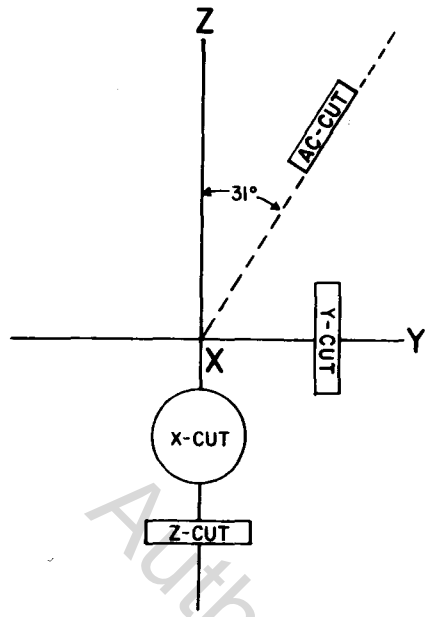

FIG. 1—*The relationship of the orientations of quartz transducers to the crystallographic axes of quartz.*

Author's Personal Copy

MPa pressure. Other transducer materials also useful for high-temperature measurements are tourmaline and lithium niobate. Principally because of their high power output, we have found lithium niobate transducers to be superior to quartz for longitudinal wave velocity measurements at elevated temperatures [*7*]. Lithium niobate transducers however have the disadvantage of being quite fragile.

Common ceramic transducers used for velocity measurements include barium titanate, lead zirconate titanate (PZT), and lead metaniobate. These are available in longitudinal and shear modes and because of their relatively high output are ideal for velocity measurements at elevated pressures; however, their Curie temperatures are relatively low. For shear measurements an excellent combination is *AC* quartz as a sending transducer, because of its low longitudinal component, and lead zirconate titanate (shear mode) as a receiver, because of its large electrical output for a unit displacement. Several materials, including stop cock grease, balsam, glycerin, and glycerol and silicone grease, have been used for bonding transducers to samples. We have found that if the sample ends are cut flat with a surface grinder or precision cutoff saw, no bonding materials are necessary.

Several transducer configurations can be used to measure compressional and shear velocities simultaneously. For example, compressional and shear transducers can be both mounted on the core ends, or a set of coaxial transduc-

ers can be stacked on each core end such that the shear transducers are directly in contact with the rock. In the latter case, accurate measurement of the compressional velocity takes into account the delay through the shear transducers.

The rock sample is jacketed to prevent the pressure medium from entering the rock pore spaces. The jacket configuration depends upon whether temperature or pore pressure or both are being controlled during the pressure runs. For velocity measurements solely as a function of confining pressure the sample is usually jacketed with copper foil. The rock core ends are either painted with silver conducting paint, or thin brass disks are spot soldered to the copper jacket at each end. We have found the latter technique superior for shear wave velocity measurements because of the improved signal.

The arrangement of the rock specimen, transducers, and backing pieces is shown in Fig. 2. A high mass backing piece (electrode), such as brass, provides a signal superior to materials such as aluminum. To exclude the pressure fluid from the spaces between the backing pieces, transducers and electrodes, gum rubber tubing is fitted over the sample assembly. Electrical connections from a sample holder designed to fit into the pressure vessel are plugged into the backing pieces.

Author's Personal Copy

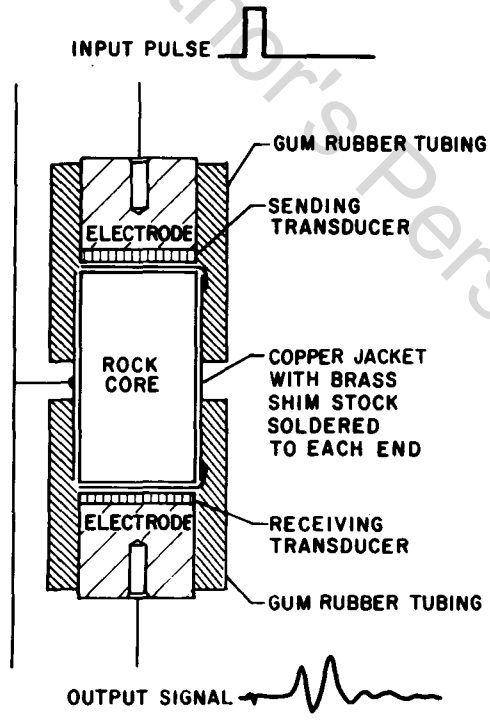

FIG. 2—*Rock core, electrode and transducer assembly.*

Velocities are obtained from the sample length (measured with a micrometer) and the transit time of the elastic wave. Several techniques have been used for the measurement of the transit times [*2,4,8*]. The technique of Birch [*4*], which will be described here, is of sufficient accuracy for most velocity determinations and is particularly convenient because of the use of the mercury delay line. The arrangement of the equipment is shown in Fig. 3. A rectangular pulse of 50 to 400 V and approximately 0.1 to 10 μs in length is simultaneously applied to the sending transducer of the sample and to a transducer within a calibrated mercury delay line. The signals received from the sample and the mercury delay line are each displayed as single traces on a dual trace oscilloscope. The delay line is calibrated so that when the first arrivals are superimposed the travel time in the delay line is equivalent to that in the sample. The rock velocity v, determined from the sample length l_s, the length of the mercury column l_{Hg} and the velocity of mercury (v_{Hg} = 1.446 km/s at 30°C), is given by

$$v = l_s \, v_{Hg} / l_{Hg}$$

The mercury delay line (Fig. 4) contains a fixed transducer at the base of the mercury column and a movable transducer that can be adjusted vertically and its position read with a dial gage. The zero setting of the delay line is determined by plotting the mercury delay line readings for first arrivals from steel cylinders of different length and extrapolating to zero length. The travel time through a 5-cm-long sample is usually between 5 and 15 μs, which corresponds to paths in mercury of 0.7 to 3.5 cm.

Typical compressional and shear wave signals are shown in Fig. 5. The accuracy of velocity measurements (usually to within 1%) depends principally on establishing the onset of the first motion from the sample. In addition, careful

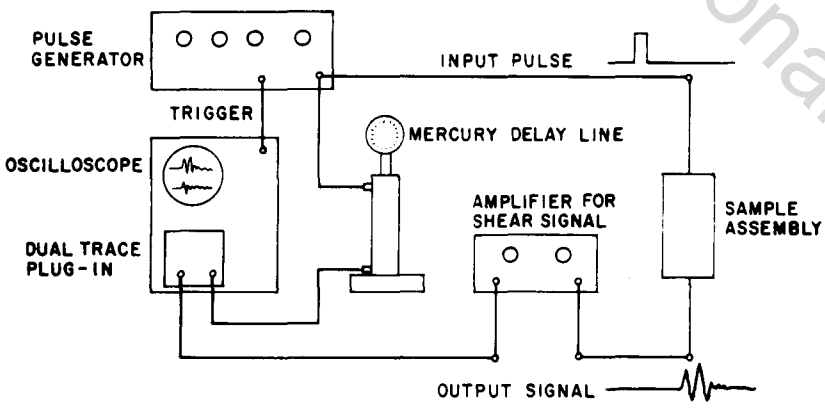

FIG. 3—*Schematic diagram of electronics for velocity measurements.*

Author's Personal Copy

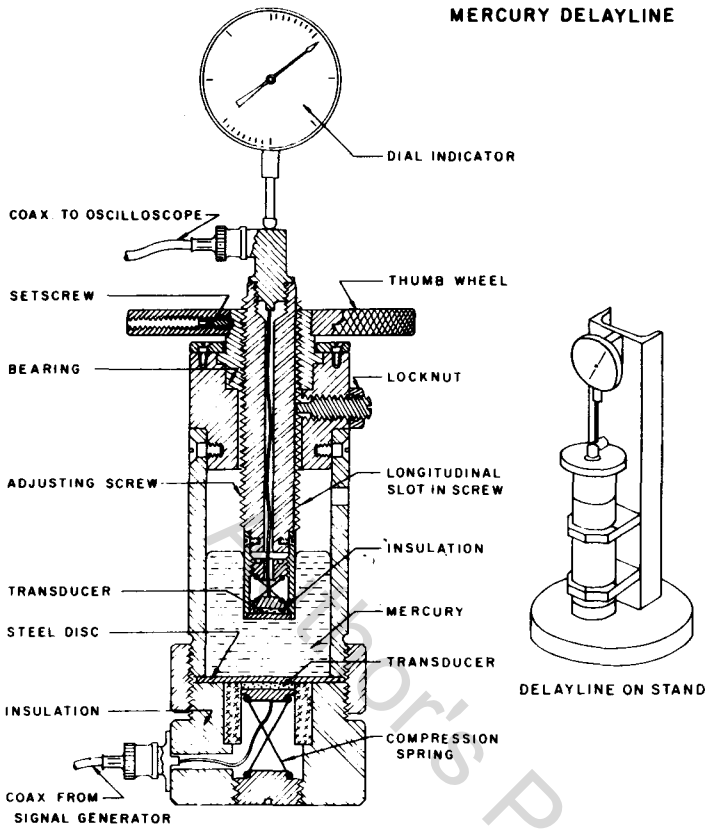

FIG. 4—*Mercury delay line.*

length measurement of the sample and calibration of the mercury delay line are essential. The precision of the measurements is better than 0.1%.

Velocity Measurements as a Function of Pressure

Several different pressure generating systems have been used to produce relatively high hydrostatic confining pressures for velocity determinations. A system similar to that used by Birch [*4*] at Harvard University is illustrated in Fig. 6. A calibrated Manganin® coil for pressure measurement is placed with the sample in the high pressure side of an intensifier, with an inner diameter of 3.8 cm and an outer diameter of 15 cm. Pressures up to 100 MPa (1 kbar) are generated by a hand pump. For higher pressures to 1000 MPa, pressure originates by the advance of a packed piston driven by a 15-cm-diameter ram. Note that the initial pressure port is closed off by the advance of the piston. The high pressure fluid is a mixture of kerosene and petroleum ether.

Author's Personal Copy

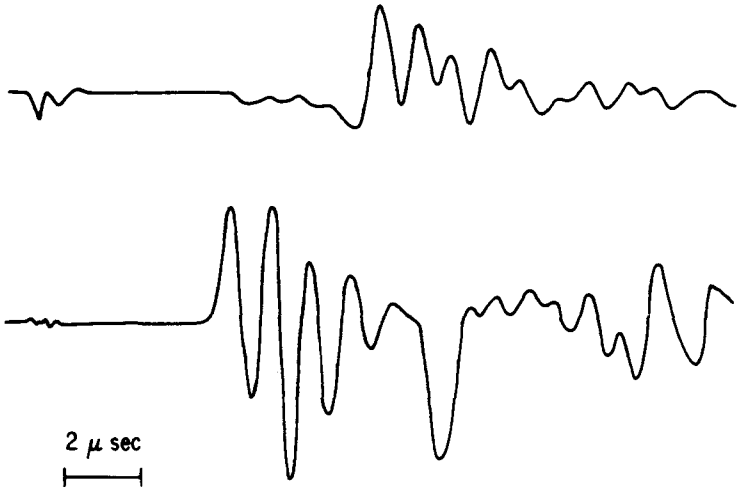

FIG. 5—*Oscilloscope traces for shear and longitudinal wave arrivals.*

Author's Personal Copy

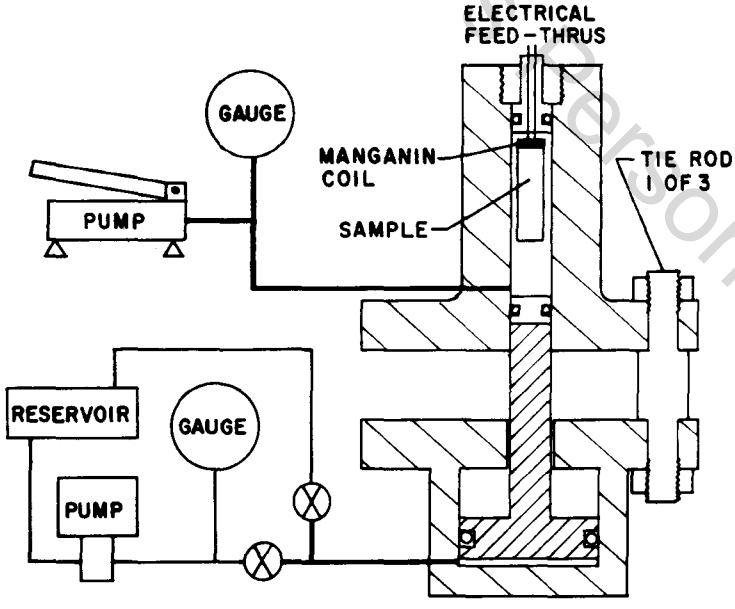

FIG. 6—*Pressure system for measurements of velocities to 1000 MPa.*

A somewhat similar system, routinely used for pressure generation to 1000 MPa, which we have used successfully for several years, is illustrated in Fig. 7. The sample is placed in a pressure vessel 4.5 cm in inner diameter and 28 cm in outer diameter, which is not an integral part of the intensifier. The check valve allows recharging of the high pressure side of the intensifier during runs to 1000 MPa. The pressure medium in the vessel is a synthetic di-ester base fluid, whereas well refined, dewaxed antifoaming hydraulic oil is used on the low pressure side of the intensifier.

A modified Bridgman-Birch pressure system described by Bridgman [*9*] and Birch [*10*] has been successfully used in the measurement of velocities to hydrostatic confining pressures of 3000 MPa [*11*]. The system (Fig. 8) consists of a conical high-pressure cylinder that is driven by a 145-kg (500-ton) press into a massive support ring having a matching conical inner surface, thereby producing external pressure on the high-pressure cylinder. The upper 36-kg (125-ton) press drives a packed piston down into the pressure vessel. The upper and lower jacks are operated simultaneously by air pumps connected to a single oil reservoir. The press frame, consisting of three platens and six connecting tie rods, serves to contain the thrusts of the jacks and to locate the assembly. The tapered pressure vessel is 30 cm long and has a 1.9-cm bore. Electrical leads pass through the closure at the lower end of the vessel. The pressure medium was a mixture of pentane and 2-methylbutane. Pressure was measured by observing the change in electrical resistance of a Manganin wire coil located within the pressure chamber and calibrated by observing the changes in electrical resistance at the freezing point of mercury and the lowest solid-solid transition of bismuth.

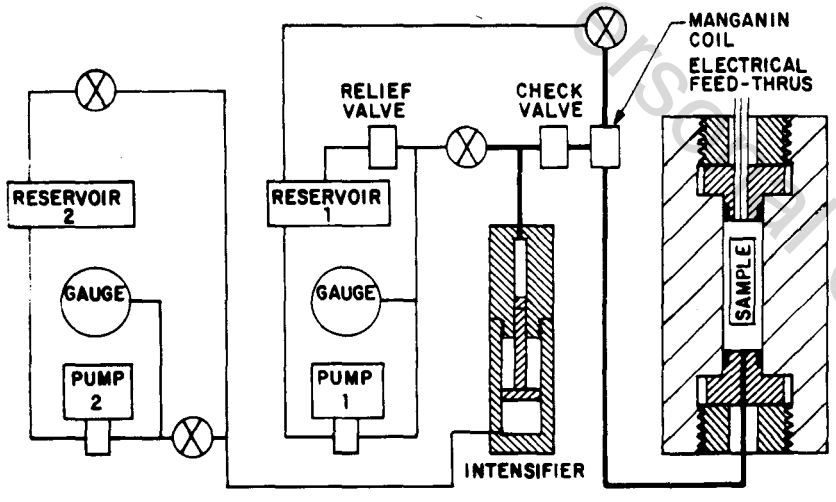

FIG. 7—*Pressure system for measurements of velocities to 1000 MPa.*

Author's Personal Copy

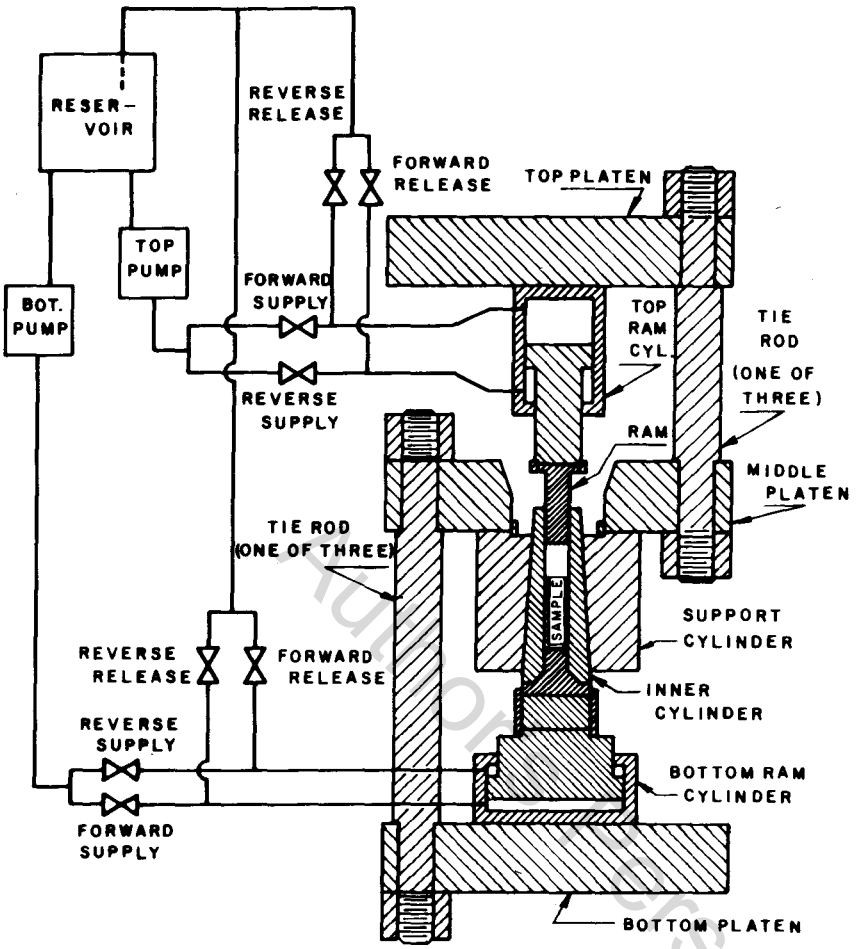

FIG. 8—*Bridgman-Birch 3000 MPa pressure system.*

For some time there has been considerable interest in the petroleum industry on the effect of pore pressure on elastic wave velocities in sedimentary rocks. Several studies [*12–16*] have shown that fluids under pressure in rocks can have a marked influence on dynamic elastic properties. The application of fluid pressure to cracks and pores in rocks dramatically lowers longitudinal and shear wave velocities.

The measurement of velocities as a function of confining and pore pressure requires two pressure generating systems and a more elaborate sample jacketing procedure, since an additional pressure port is required to connect the rock cavities to the pore fluid reservoir and associated pumping unit. A diagram showing the sample assembly, transducer electrodes, electrical feedthroughs

Author's Personal Copy

and porting for velocity measurements to confining and pore pressures of 200 MPa [*16*] is shown in Fig. 9. The sample is encircled by a thin shell of aluminum containing shallow longitudinal slots in its inside surface, which are ported to the pore-pressure pumping system, thereby allowing a controlled pore pressure within the sample. The containment cylinder has a full length narrow opening filled with epoxy, which permits closure with increasing confining pressures. To prevent interaction of the pore and containment fluids, the transducers and electrodes are placed on the sleeved sample and jacketed with gum rubber tubing.

Velocity Measurement at Elevated Temperatures

Compared to measurements at high pressures, there is much less information available on the dynamic properties of rocks as a function of temperature.

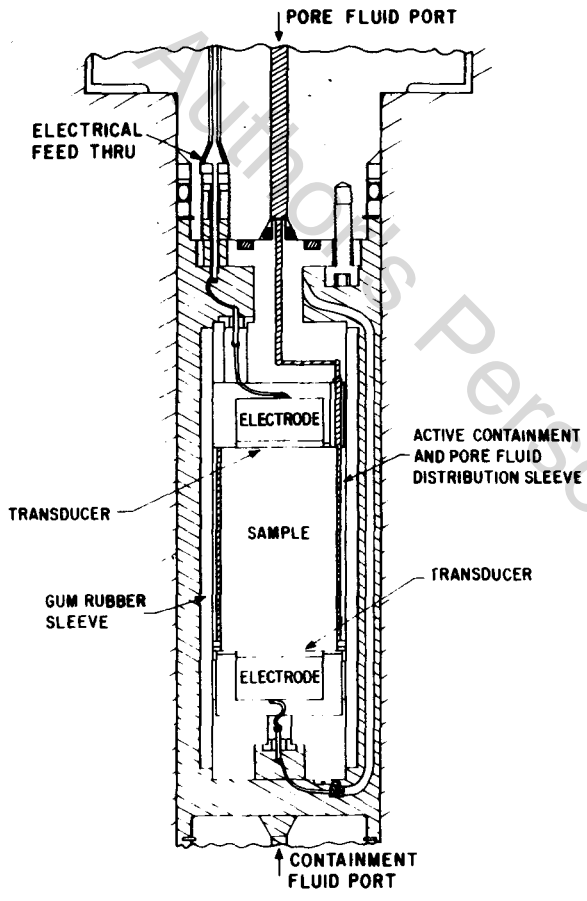

FIG. 9—*Pore pressure sample holder* [16].

Authors Personal Copy

Considerable research remains to be done at elevated temperatures. One reason for this is that measurements of velocity at elevated temperatures must also be done at elevated pressures. As was first demonstrated by Ide [*17*], heating of rocks at atmospheric pressure permanently lowers velocities because of the formation of thermally produced cracks. At low confining pressures anisotropic thermal expansion of minerals can widen existing grain boundary and cleavage cracks and also produce new cracks. However, at elevated pressures, crack formation is suppressed and temperature derivatives of velocities are related directly to the intrinsic effect of temperature on the mineral velocities.

Most of the data on the temperature dependence of velocity for rocks have been obtained using a gas, such as nitrogen or argon, as a pressure medium [*7, 18–21*]. The rock cylinders are usually jacketed with stainless steel (Fig. 10). The furnace consisting of Nichrome® wire windings is placed inside the pressure vessel, which is often surrounded by an external water-cooled jacket. In order to obtain minimum temperature gradients within the specimens, multiple zone furnaces are sometimes used (Fig. 11). Temperature is usually monitored by either chromel-alumel or iron constantan thermocouples.

A different type of apparatus that has been successfully used for velocity measurements at elevated temperatures and pressures has been described by Kern et al [*22–24*]. Samples in the shape of cubes, 4.2 cm on edge, are placed between six pyramidal pistons, which produce approximate hydrostatic stress. A furnace is placed around the end of each piston next to the rock and cooling jackets surround the pistons on the ends containing the transducers. As with the gas systems, velocities are obtained using the pulse transmission technique. Advantages of a system of this design include the relatively low operating temperatures of the transducers, capabilities of measuring anisotropy in a single sample, and the elimination of safety problems associated with working with gas at high temperatures and pressures. On the other hand, travel time corrections have to be made for waves traveling through pistons with relatively

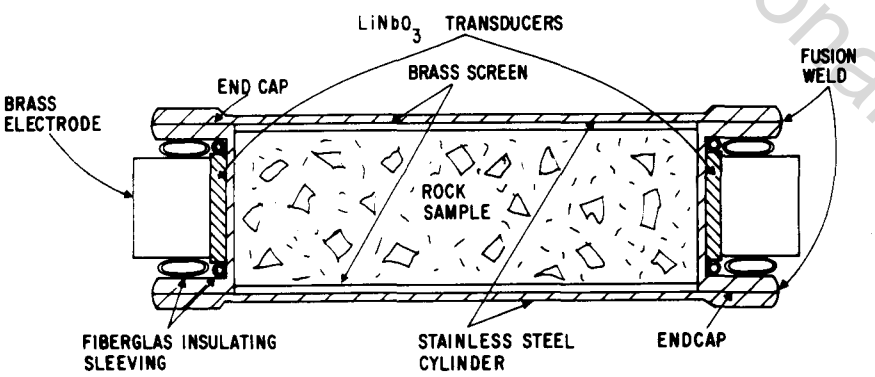

FIG. 10—*Rock core jacket assembly for temperature investigations* [7].

Author's Personal Copy

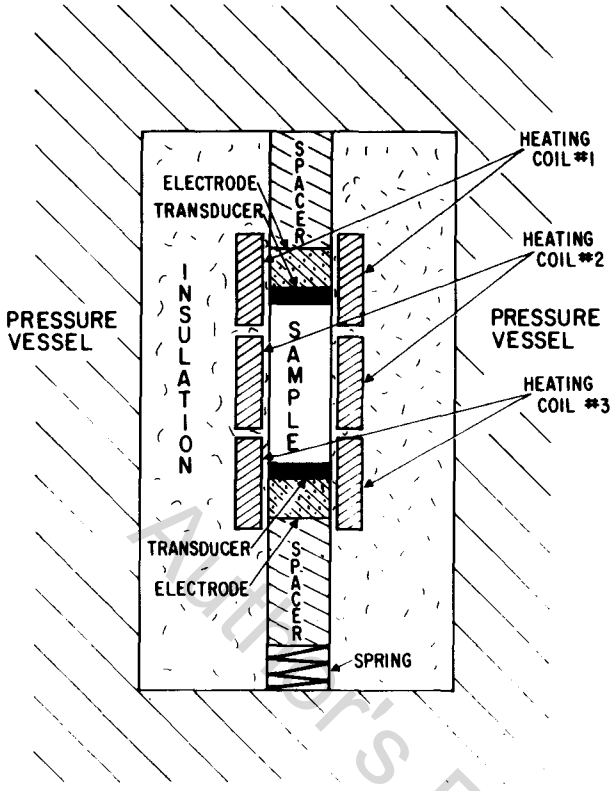

FIG. 11—*Furnace and rock core arrangement for temperature investigations* [7].

large temperature gradients, and the pressure, which is difficult to measure with accuracy, is quasi-hydrostatic.

Elastic Moduli

The elastic moduli of rocks can be readily calculated from their densities and wave velocities. The relationships between velocities, density, and various elastic moduli, as well as the connecting identities for the elastic moduli, as summarized by Birch [*25*], are given in Table 1. These apply only to isotropic solids. Since most metamorphic rocks and many igneous and sedimentary rocks are anisotropic [*4,25,26*], the use of these relationships must be justified by clearly demonstrating that the rock is isotropic. Rock anisotropy originates from preferred orientations of cracks and anisotropic minerals. Methods of detecting anisotropy in rocks includes analyses of preferred mineral orientation by optical techniques and measurements of longitudinal and shear velocities in different directions. Shear velocity measurements are particularly use-

Author's Personal Copy

TABLE 1—*Relations between longitudinal velocity V_l, shear velocity V_s, density ρ, and elastic moduli.*

Variables	Bulk Modulus K	Young's Modulus E	Lame's Constant λ	Poisson's Ratio σ	Longitudinal Modulus L	Shear Modulus G
ρ, V_l, V_s	$\rho[V_l^2 - (4/3)V_s^2]$	$\rho V_s^2 \frac{(3V_l^2 - 4V_s^2)}{V_l^2 - V_s^2}$	$\rho(V_l^2 - 2V_s^2)$	$\frac{V_l^2 - 2V_s^2}{2(V_l^2 - V_s^2)}$	ρV_l^2	ρV_s^2
λ, G	$\lambda + (2G/3)$	$G \frac{3\lambda + 2G}{\lambda + G}$	...	$\frac{\lambda}{2(\lambda + G)}$	$\lambda + 2G$	...
K, λ	...	$9K \frac{K - \lambda}{3K - \lambda}$	...	$\frac{\lambda}{3K - \lambda}$	$3K - 2\lambda$	$\frac{3(K - \lambda)}{2}$
K, G	...	$\frac{9KG}{3K + G}$	$K - (2G/3)$	$\frac{3K - 2G}{2(3K + G)}$	$K + (4G/3)$	...
E, G	$EG/3(3G - E)$	...	$G \frac{E - 2G}{3G - E}$	$(E/2G) - 1$	$G \frac{4G - E}{3G - E}$	...
K, E	...	...	$3K \frac{3K - E}{9K - E}$	$\frac{3K - E}{6K}$	$3K \frac{3K + E}{9K - E}$	$\frac{3KE}{9K - E}$
λ, σ	$\lambda[(1 + \sigma/3\sigma]$	$\lambda \frac{(1 + \sigma)(1 - 2\sigma)}{\sigma}$	...	...	$\lambda \frac{(1 - \sigma)}{\sigma}$	$\lambda \frac{1 - 2\sigma}{2\sigma}$
G, σ	$G[2(1 + \sigma)]/[3(1 - 2\sigma)]$	$2G(1 + \sigma)$	$G \frac{2\sigma}{1 - 2\sigma}$	...	$G \frac{2 - 2\sigma}{1 - 2\sigma}$	...
K, σ	...	$3K(1 - 2\sigma)$	$3K \frac{\sigma}{1 + \sigma}$	...	$3K \frac{1 - \sigma}{1 + \sigma}$	$3K \frac{1 - 2\sigma}{2 + 2\sigma}$
E, σ	$E/[3(1 - 2\sigma)]$	...	$\frac{E}{(1 + \sigma)(1 - 2\sigma)}$	...	$\frac{E(1 - \sigma)}{(1 + \sigma)(1 - 2\sigma)}$	$\frac{E}{2 + 2\sigma}$

Author's Personal Copy

[13] King, M. S., *Geophysics*, Vol. 31, No. 1, Feb. 1966, pp. 56-73.
[14] Banthia, B. S., King, M. S., and Fatt, I., *Geophysics*, Vol. 30, No. 1, Feb. 1965, pp. 117-121.
[15] Domenico, S. N., *Geophysics*, Vol. 42, No. 7, Dec. 1977, pp. 1339-1368.
[16] Christensen, N. I., *Geophysical Journal*, in press.
[17] Ide, J. M., *Journal of Geology*, Vol. 45, No. 12, Oct.-Nov. 1937, pp. 689-716.
[18] Hughes, D. S. and Maurette, C., *Geophysics*, Vol. 21, No. 2, April 1956, pp. 277-284.
[19] Peselnick, L. and Stewart, R. M., *Journal of Geophysical Research*, Vol. 80, No. 26, Sept. 1975, pp. 3765-3768.
[20] Ramananantoandro, R. and Manghnani, M. H., *Tectonophysics*, Vol. 47, No. 1/2, May 1978, pp. 73-84.
[21] Spencer, Jr., J. W. and Nur, A., *Journal of Geophysical Research*, Vol. 81, No. 10, Feb. 1976, pp. 899-904.
[22] Kern, H. and Fakhimi, M., *Tectonophysics*, Vol. 28, No. 4, Nov. 1975, pp. 227-244.
[23] Kern, H., *Physics and Chemistry of Minerals*, Vol. 4, No. 10, Nov. 1979, pp. 161-171.
[24] Kern, H. and Richter, A., *Journal of Geophysics*, Vol. 49, No. 1, Jan. 1981, pp. 47-56.
[25] Birch, F., *Journal of Geophysical Research*, Vol. 66, No. 7, July 1961, pp. 2199-2224.
[26] Christensen, N. I., *Journal of Geophysical Research*, Vol. 71, No. 14, July 1966, pp. 3549-3556.

Author's Personal Copy